eZ2957

IO Simulator Abstract

The tight coupling of the eZ80Acclaim microcontroller and an Ethernet chip provide an ideal environment for a flexible tool for simulating complex industrial control systems. The I/O Simulator uses a flexible user interface to provide hardware stimulation of a control system in order to speed the tuning of that system, and reduce hardware costs. At the other end of the network connection a simple computer resident user interface provides rapid switching between projects, minimizing setup time. This ability for quick setup reduces the anxiety of the user when project priorities change at high frequencies. A single eZ80 microcontroller senses user activation of sensors and supplies visual feedback. Design and implementation of this system is accomplished in a short time frame due to sophisticated design tools produced by Zilog, including a full featured and efficient RTOS, ZTP, which is a set of TCP/IP software libraries and a version of the XINU operating system. In fact the design package and microcontroller features compels the developer to consider the continuing contribution to this technological segment.

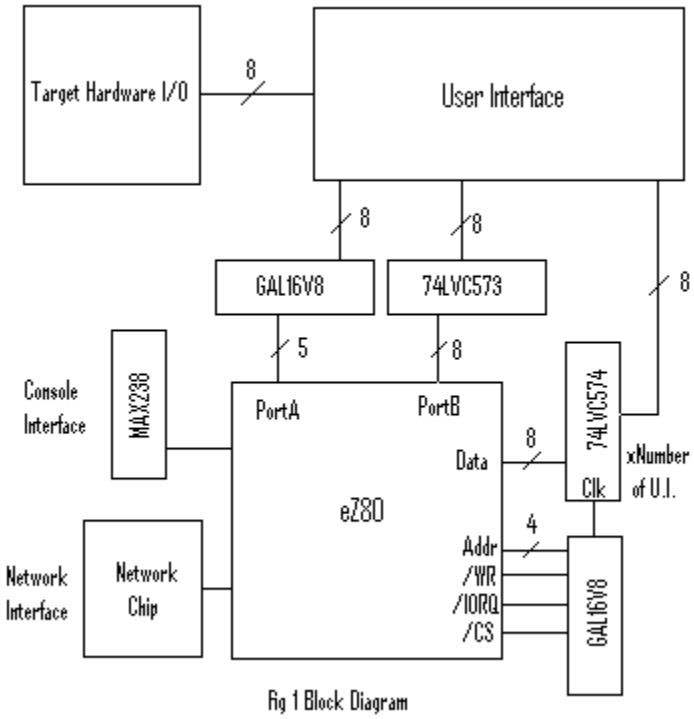

Fig 1 Block Diagram

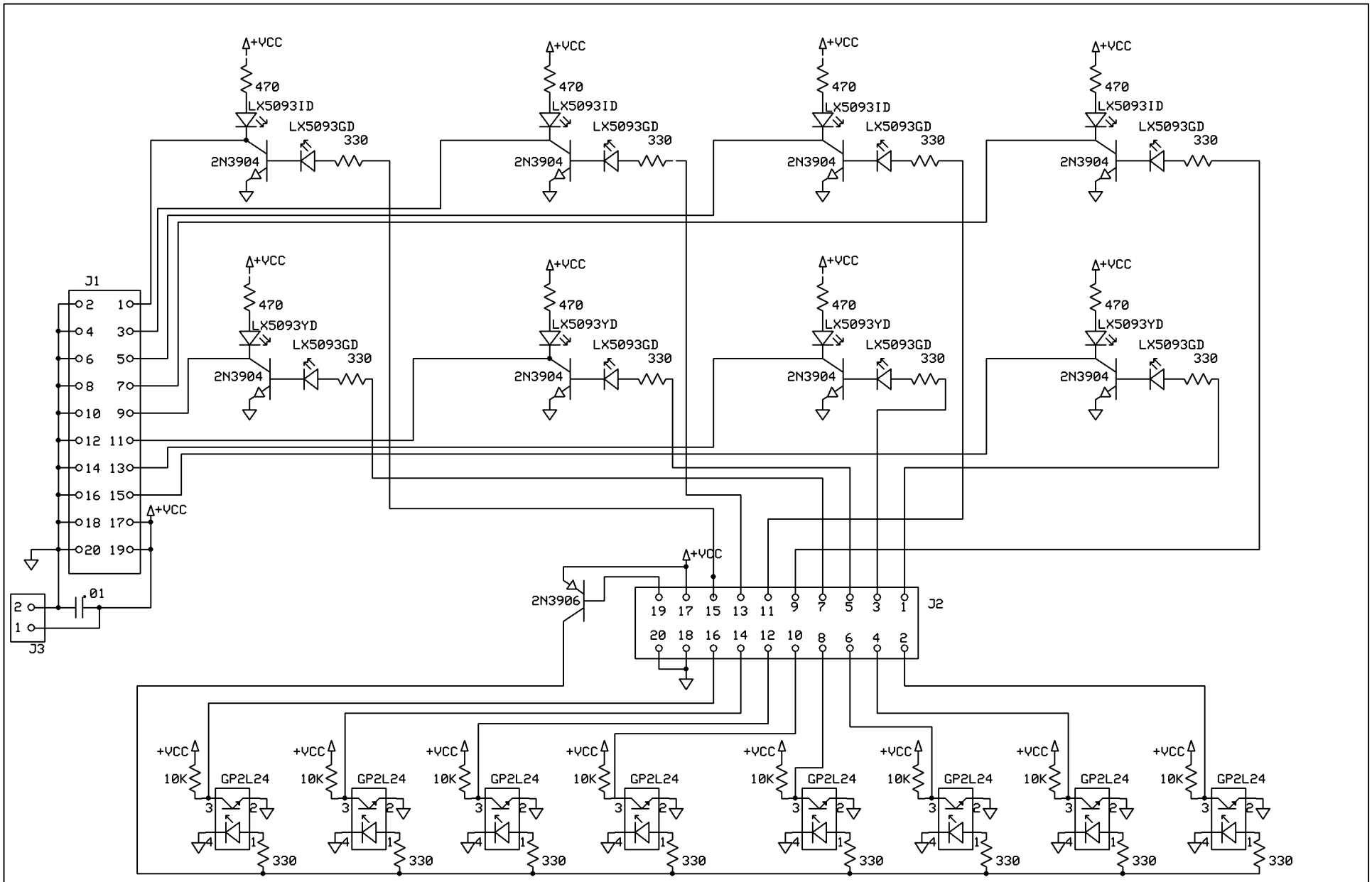

Zilog eZ80 Hosted		
IO Simulator User Interface		
Tom Kohan	Rev 1.0 9/26/2004	Page 1 of 1